# Smartphones
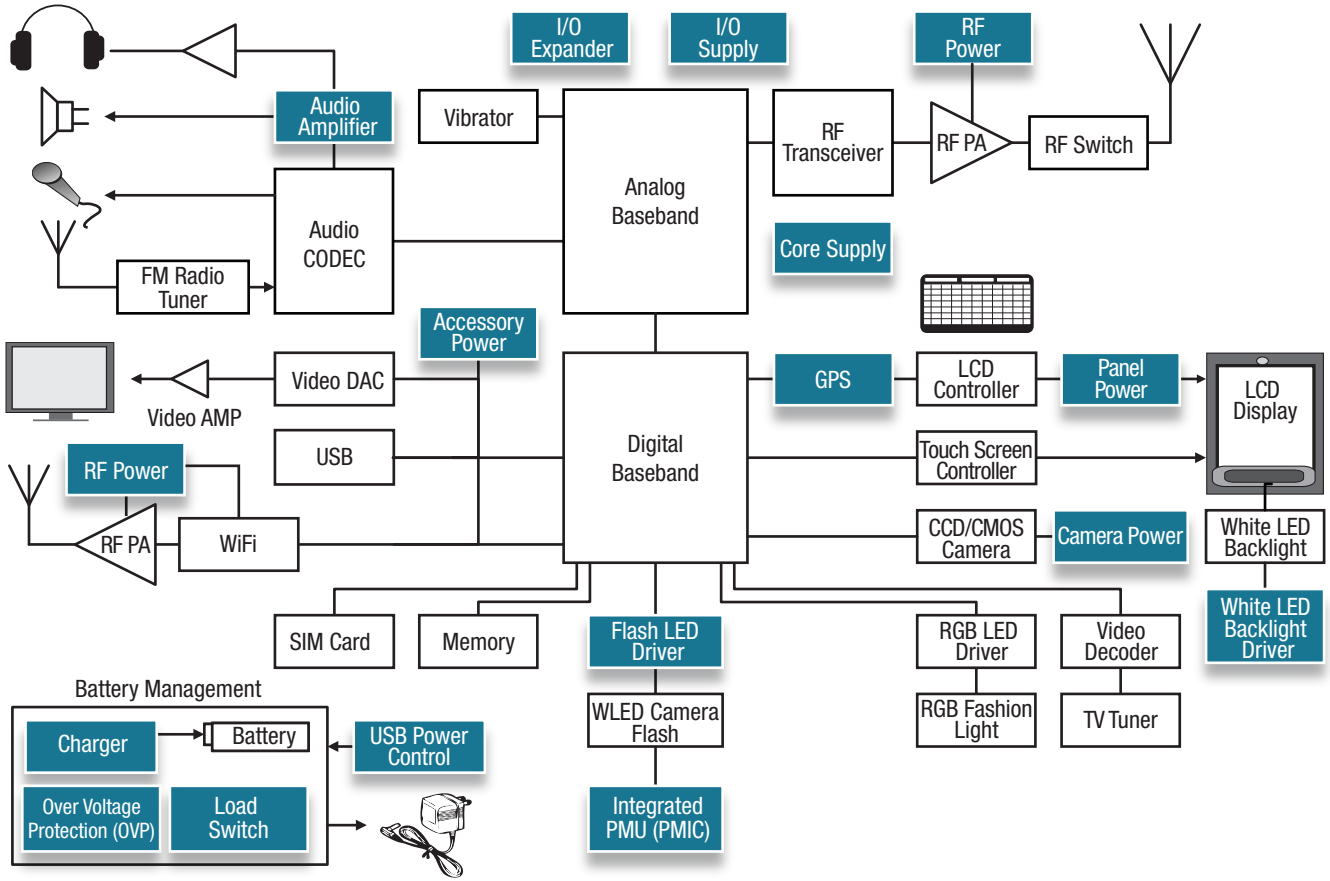
***Part numbers link to product information***