Transceiver
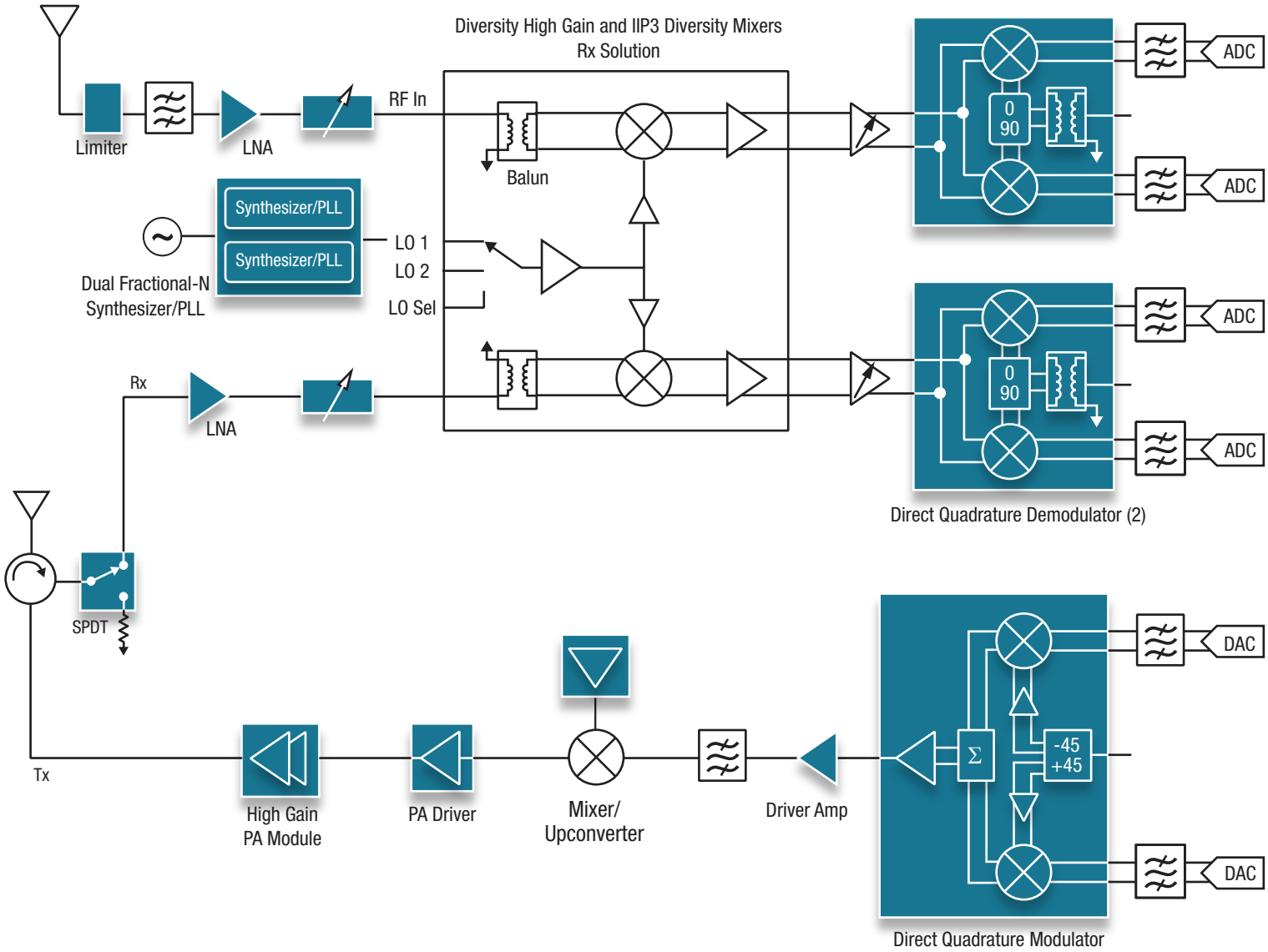
Part numbers link to product information